Schneider Electric

Final Distribution, Wiring Devices & Smart Home Energy Management Devices

Maximum Retail Price Effective January 15th, 2026

se.com/in

Contents

About Schneider Electric 4
Easy9 Philosophy 5
Miniature Circuit Breaker (MCB).....7
Residual Current Circuit Breaker (RCCB) - AC Type 9
Surge Protection Device.....10

Timers & Time Switches 11

Easy9 Distribution Boards 13

PratiKa.....16
Plugs and Sockets - IP44 / IP67 16

Electra 20
Metal Clad Plugs & Sockets 20

56 Series 21
Plugs and Sockets - IP56 / IP66 21

Wiring Devices 24
LIVIA - Switch to the extra-ordinary.....25
Miluz ZeTa Little things, big impact.....27
Opale - Switches with Satin Finish 33
Unica Pure - Irresistibly Beautiful 35
ZENcelo India - The Revolutionary Full-Flat Switch 43
AvatarOn - It's also a Switch.....47
Kavacha - Weather Protected Series.....54
Metal Boxes 55

Smart Home Energy Management System 56
Wiser™.....60
Surface and Flush Mount Occupancy Sensors.....61
Dimmable Sensors with Light Regulation.....61
Wall Mount Sensors.....62
Hotel - ELV Dual Motion Sensor 62

About Schneider Electric

Schneider Electric is a global energy technology leader, driving efficiency and sustainability by electrifying, automating, and digitalising industries, businesses, and homes.

Our technologies enable buildings, data centres, factories, infrastructure, and grids to operate as open, interconnected ecosystems, enhancing performance, resilience, and sustainability. Our portfolio includes intelligent devices, software-defined architectures, AI-powered systems, digital services, and expert advisory.

With 160,000 employees and one million partners in over 100 countries, Schneider Electric is consistently ranked amongst the world's most sustainable companies

Our business offerings
Span the entire spectrum from Plant-to-Plug.

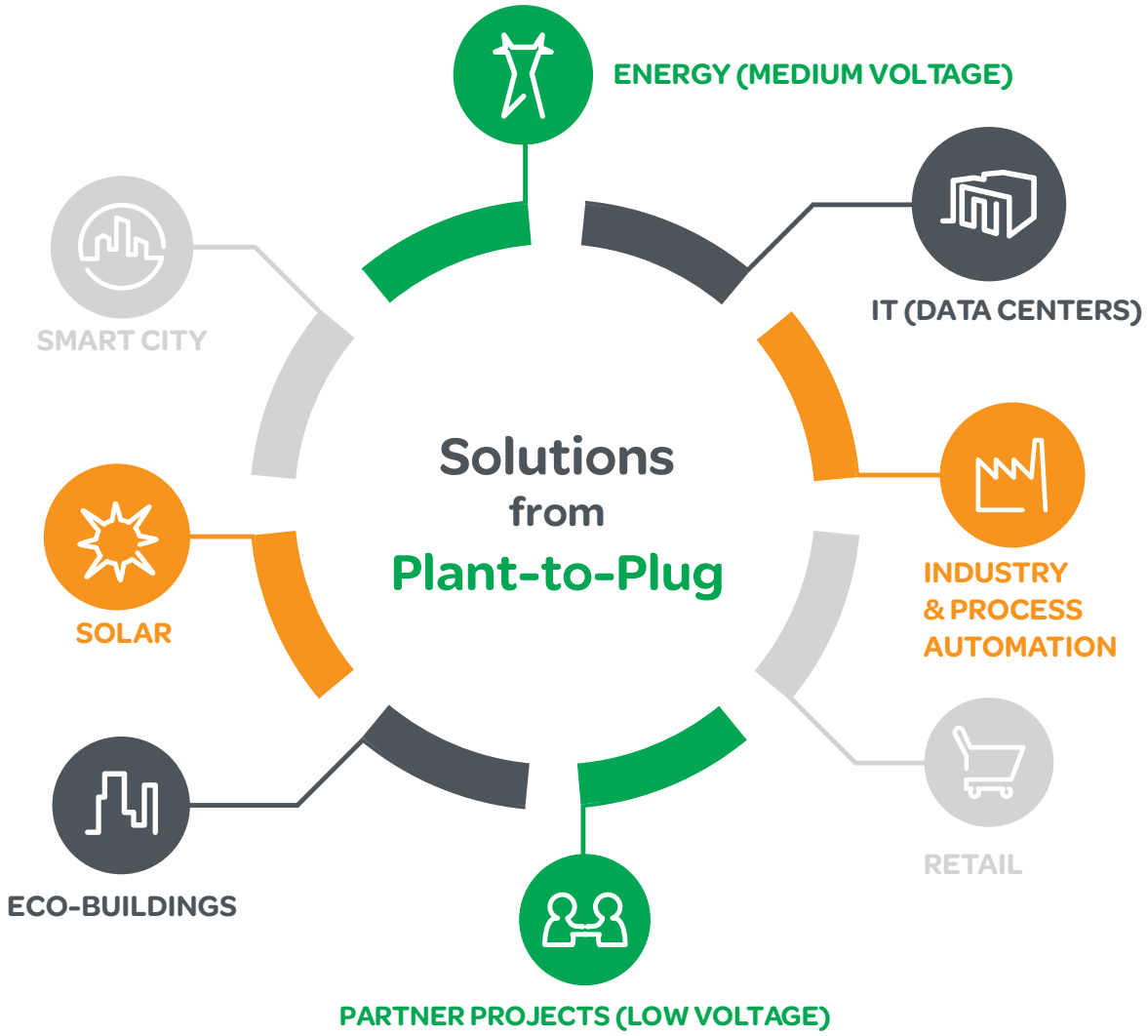

W.E.F. January 15th, 2026

Easy9 Philosophy

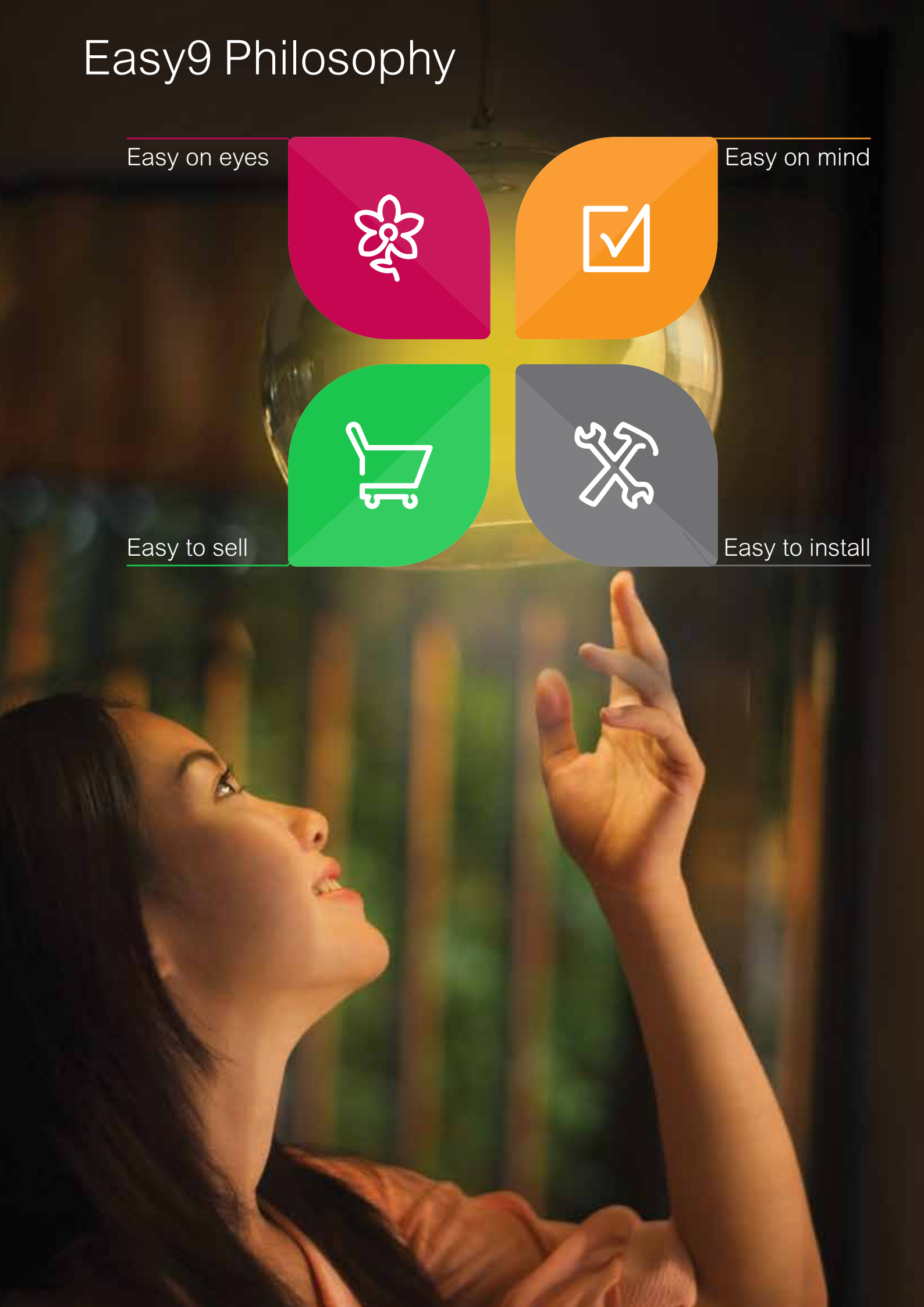

Safeguard your peace of mind

Get maximum electrical protection with **Easy9**

Easy9

Miniature Circuit Breaker (MCB)

For circuit protection against Overload and Short Circuit Current Fault

- Conforms to IS/IEC 60898-1
- Breaking Capacity 6kA, 10kA
- Green Compliance: RoHS, REACh
- Energy Limiting Class 3
- Trip Free Mechanism
- Fast Tripping Mechanism
- Suitable for Positive Isolation
- Line Load Reversibility
- Bi-connect Terminals
- Degree of Protection IP 20
- Operating Voltage 240V / 415V
- Frequency 50Hz

Easy9 - C Curve 6kA

[In] Rated Current (A)	1 Pole Reference	Unit MRP [₹]	2 Pole Reference	Unit MRP [₹]	3 Pole Reference	Unit MRP [₹]	4 Pole Reference	Unit MRP [₹]
Module Width**	1 mod		2 mod		3 mod		4 mod	
Package Size	12 Nos.		6 Nos.		4 Nos.		3 Nos.	
6	EZ9F76106	253	**EZ9F76206**	943	**EZ9F76306**	1465	-	-
10	EZ9F76110	253	**EZ9F76210**	943	**EZ9F76310**	1465	-	-
16	EZ9F76116	253	EZ9F76216	943	EZ9F76316	1465	**EZ9F76416**	2083
20	EZ9F76120	253	EZ9F76220	943	**EZ9F76320**	1465	**EZ9F76420**	2083
25	EZ9F76125	253	EZ9F76225	943	**EZ9F76325**	1465	**EZ9F76425**	2083
32	EZ9F76132	253	EZ9F76232	943	EZ9F76332	1465	EZ9F76432	2083
40	**EZ9F76140**	579	EZ9F76240	1254	**EZ9F76340**	2121	EZ9F76440	2839

Easy9 - C Curve 10kA

[In] Rated Current (A)	1 Pole Reference	Unit MRP [₹]	2 Pole Reference	Unit MRP [₹]	3 Pole Reference	Unit MRP [₹]	4 Pole Reference	Unit MRP [₹]
Module Width**	1 mod		2 mod		3 mod		4 mod	
Package Size	12 Nos.		6 Nos.		4 Nos.		3 Nos.	
6	EZ9F71106	334	-	-	**EZ9F71306**	1841	-	-
10	EZ9F71110	334	**EZ9F71210**	1156	**EZ9F71310**	1841	-	-
16	EZ9F71116	334	**EZ9F71216**	1156	**EZ9F71316**	1841	**EZ9F71416**	2500
20	EZ9F71120	334	**EZ9F71220**	1156	**EZ9F71320**	1841	**EZ9F71420**	2500
25	EZ9F71125	334	**EZ9F71225**	1156	**EZ9F71325**	1841	**EZ9F71425**	2500
32	EZ9F71132	334	EZ9F71232	1156	EZ9F71332	1841	EZ9F71432	2500
40	-	-	**EZ9F71240**	1699	**EZ9F71340**	2640	**EZ9F71440**	3223
63	**EZ9F71163**	876	EZ9F71263	1905	EZ9F71363	2827	EZ9F71463	3421

Easy9 - B Curve 10kA

[In] Rated Current (A)	1 Pole Reference	Unit MRP [₹]	2 Pole Reference	Unit MRP [₹]
Module Width**	1 mod		2 mod	
Package Size	12 Nos.		6 Nos.	
6	**EZ9F21106**	307	-	-
10	**EZ9F21110**	307	-	-
16	EZ9F21116	307	-	-
20	**EZ9F21120**	307	-	-
25	**EZ9F21125**	307	-	-
32	**EZ9F21132**	307	**EZ9F21232**	1577
40	-	-	**EZ9F21240**	1661

Note:

Please contact nearest Schneider Electric Sales Office or Customer Care Center for Stockable and Non Stockable status of references

*Price on Request

**18mm/module

*Bold references are MTO reference.

W.E.F. January 15th, 2026

Shield your devices and your loved ones too

Get maximum electrical protection
with **Easy9**

Residual Current Circuit Breaker (RCCB) - AC Type

For protection against Risk of Shock / Electrocution and Risk of Fire in case of Earth Leakage Current

- CE Marked Conforms to IS 12640-1, IEC 61008-1
- Green Compliance: RoHS, REACh
- Operating voltage 240 / 415V
- Operating Frequency 50Hz

[In] Rated Current (A)	Earth Leakage Sensitivity (mA)	2 Pole Reference	Unit MRP [₹]	4 Pole Reference	Unit MRP [₹]
Module Width**		2 Mod		4 Mod	
Package Size		6 Nos.		3 Nos.	
25	30	**EZ9R35225**	3775	**EZ9R35425**	5116
	100	**EZ9R55225**	4009	**EZ9R55425**	5209
	300	**EZ9R65225**	4085	**EZ9R65425**	5310
40	30	EZ9R35240	3917	**EZ9R35440**	5028
	100	**EZ9R55240**	4197	**EZ9R55440**	5310
	300	**EZ9R65240**	4162	**EZ9R65440**	5316
63	30	**EZ9R35263**	5243	EZ9R35463	5290
	100	**EZ9R55263**	5504	**EZ9R55463**	5664
	300	**EZ9R65263**	5445	**EZ9R65463**	5615

Note:
Please contact nearest Schneider Electric Sales Office or Customer Care Center for Stockable and Non Stockable status of references
*Price on Request
**18mm/module

Isolator

- CE Marked Conforms to IEC 60947-3
- For isolation of electrical circuits for maintenance or repair by ensuring there is no residual voltage or current present in the isolated section
- Utilisation category - AC 22
- Green Compliance: RoHS, REACh
- Suitable for Positive Isolation
- Line Load Reversibility
- Laser Printing
- Bi-connect Terminals
- Degree of Protection IP 20
- Operating Voltage 240V / 415V
- Frequency 50Hz

[In] Rated Current (A)	2 Pole Reference	Unit MRP [₹]	3 Pole Reference	Unit MRP [₹]	4 Pole Reference	Unit MRP [₹]
Module Width**	2 Mod		3 Mod		4 Mod	
Package Size	6 Nos.		4 Nos.		3 Nos.	
40	EZ9S66240	630	**EZ9S66340**	1339	**EZ9S66440**	1505
63	EZ9S66263	840	**EZ9S66363**	1499	EZ9S66463	1532
80	-	-	-	-	**EZ9S66480**	1961

Note:
Please contact nearest Schneider Electric Sales Office or Customer Care Center for Stockable and Non Stockable status of references
*Price on Request
**18mm/module
*Bold references are MTO reference.

W.E.F. January 15th, 2026

Surge Protection Device

For Protection of Devices against Lightning & Switching Surges

- Conforms to IEC 61643 - 11
- In conformance with standards IEC 61643-11
- For protection against Indirect lightning and Switching surges
- Inbuilt health Indicator
- Always use a Back-up MCB with your SPD

CE

Surge Arresters - Type 2

[Imax] Rated Current (kA)	1P+ N Reference	Unit MRP [₹]	3P+N Reference	Unit MRP [₹]
Module Width**	2 Mod		4 Mod	
Package Size	6 Nos.		3 Nos.	
20kA	EZ9L33620	4332	**EZ9L33720**	7330
45kA	-	-	EZ9L33745	10996

Network: single phase
Earthing system: TT or TN-S

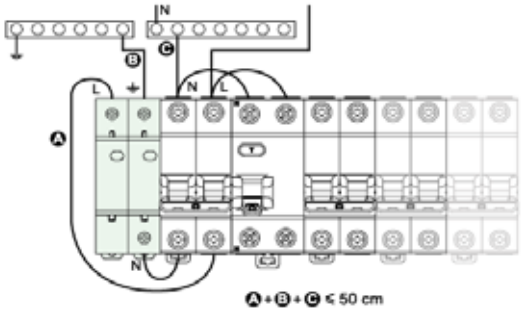

Network: three phase
Earthing system: TT or TN-S

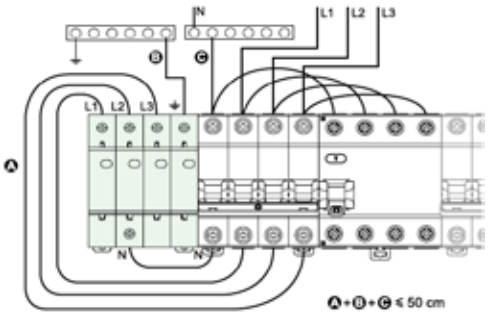

Backup MCB Selection Chart

[Imax] Rated Current (kA)	1P+ N Reference	Backup MCB	3P+N Reference	Backup MCB
20kA	EZ9L33620	EZ9F71120	EZ9L33720	EZ9F71420
45kA	-	-	EZ9L33745	EZ9F71463

Note:
Please contact nearest Schneider Electric Sales Office or Customer Care Center for Stockable and Non Stockable status of references
*Price on Request
**18mm/module
*Bold references are MTO reference.

W.E.F. January 15th, 2026

Timers & Time Switches

Analog Time Switches

- 24H, 7D Programmable switch Voltage Rating: 230V AC +10%, -15%
- Memory: Upto 56 Switching Operations
- Back up of program: Operating reserve for 100, 200 Hours
- Overall dimensions: 5 modules
- Minimum time between two switching operations: 15, 30 min
- Accuracy: ≤ ±1 s/day at +20°C

Description	Module Width 18mm/module	Reference	Unit MRP [₹]
IH 24H 16 A 15 mts interval 1 channel	1	15336	6338
IH 24H 16 A 30 mts interval 1 channel	1	CCT15365	6913
IH 7 day 16 A 1 channel- Max 21 On and 21 Off cycles	3	CCT15367	9896
IH 24H 16 A 30 mts 1 channel without reserve	3	CCT16364	5615

Digital Time Switches

- 7D, 24H Programmable switch. Voltage Rating: 230V AC +10%, -15%
- Consumption: 1 channel - max. 4VA; 2 channels - max. 7VA
- Memory: Upto 56 Switching Operations
- Back up of program & time by lithium battery: Operating reserve: 6 Years
- Overall dimensions: 5 modules
- Cable length: 100m
- Minimum time between two switching operations: 1 min

Description	Module Width 18mm/module	Reference	Unit MRP [₹]
IHP 1C w (24h/7d) programmable time switch	2.5	CCT15441	13622
IHP+ 1C (24h/7d) SMARTw programmable time switch	2.5	**CCT15551**	16805
IHP 2C w (24h/7d) programmable time switch	2.5	**CCT15443**	17572
IHP DCF (24h/7d) SMART programmable time switch	2.5	**CCT15858**	27662
IHP+ 2C (24h/7d) SMARTw programmable time switch	2.5	**CCT15553**	19441

Timers

- Switching capacity 16 A, max
- Delay range from 30 sec to 20 min
- Capacity for lighted pushbutton 150 mA
- Electric distribution busbar compatibility
- Output power capacity CCT15232-2300W
- Output power capacity CCT15223-3600W

Description	Module Width 18mm/module	Reference	Unit MRP [₹]
MINs - electronic timer - 0.5 to 20 min	1	**CCT15232**	7695
MINs - electronic timer - 0.5 to 20 min with switch Off Warning	1	**CCT15233**	9881
MINs - electronic timer - 0.5 to 20 min with switch Off Warning and Impulse relay function	1	**CCT15234**	9288

Note:
Please contact nearest Schneider Electric Sales Office or Customer Care Center for Stockable and Non Stockable status of references
*Price on Request
**18mm/module
*Bold references are MTO reference.

W.E.F. January 15th, 2026

Twilight switch

- Includes wall mounted cell
- Adjustable brightness threshold 2 to 2000 Lux
- 2 LEDs to signal the sensor status and the output status
- Test button: To check the product and load cabling
- Switching capacity: 16Amp
- Screwless Terminals compatible with rigid and flexible wires
- Consumption 6 VA
- Size 45mm

Description	Module Width 18mm/module	Reference	Unit MRP [₹]
IC2000 outdoor (2 - 2000 lux) twilight switch	1	**CCT15369**	16229
Analogue indoor light sensor cell	-	**CCT15262**	8008
Wall mounted Analogue outdoor light sensor cell	-	**CCT15263**	12413
IC100 (2 - 100 lux) twilight switch	1	**CCT15482**	13652
IC2000 indoor (2 - 2000 lux) twilight switch	1	**CCT15285**	12167
IC2000p+ (2 - 2000 lux) programmable twilight switch	2.5	**CCT15483**	28199
IC100kp+ 1C (1 - 99000 lux) SMART programmable twilight switch	2.5	**CCT15494**	34106
IC100kp+ 2C (1 - 99000 lux) SMART programmable twilight switch	2.5	**CCT15495**	41987
IC Astro 2C SMART programmable twilight switch	2.5	**CCT15245**	29476
IC Astro 1C SMART programmable twilight switch	2.5	**CCT15225**	24803

Time switch accessories

Description	Module Width 18mm/module	Reference	Unit MRP [₹]
Programming kit for IHP / IC	1	**CCT15860**	12974

Thermostat

Description	Module Width 18mm/module	Reference	Unit MRP [₹]
THP1+ 1C (24h/7d) programmable thermostat	2.5	CCT15834	29513

Note:
Please contact nearest Schneider Electric Sales Office or Customer Care Center for Stockable and Non Stockable status of references
*Price on Request
**18mm/module
*Bold references are MTO reference.

W.E.F. January 15th, 2026

Easy9 Distribution Boards

IK-08
tested

IP-30
Single door
IP-43
Double door

Features

- Clean and attractive colour and finish (White RAL 9003)
- Unique design of door knob for easy operation
- Conforms to IS 8623
- High quality powder coating for long life and high reliability under the toughest of conditions
- Optimized wiring space for a clean installation
- Suitable for surface and flush mounting
- Cement Spill protector helps avoid entry of dust and cement particles
- Reversible door
- Independent centre plate
- 45° angled hole for easy installation and 1 key hole for easy alignment
- Removable top and bottom gland plates
- Unique 5-hole mounting for single-person fixing
- Conforming to international standards: Tested as per IEC 61439-3 at NABL accredited laboratories and IP tested at CPRI
- Combi-head screws for tool flexibility

W.E.F. January 15th, 2026

Easy9 Distribution Boards

Metal Enclosures

Description	Module Cutout Width**	Single Door (IP30) Reference	Unit MRP [₹]
2 way Enclosure	2	EZ9EMES02	694
4 way Enclosure	4	EZ9EMES04	784

Metal Clad P&S Units

Description	Module Cutout Width**	Single Door (IP30) Reference	Unit MRP [₹]
EZ9 Metal P&S Unit 20A 1P+N+E	2	EZ9EMS220	2250
EZ9 Metal P&S Unit 30A 3P+E	3	**EZ9EMS330**	5153

Phase Selector DBs

Description	Module Cutout Width**	Double Door (IP43) Reference	Unit MRP [₹]
Easy9 DB 4Way phase selector vertical	8 + 4 x 3	EZ9EPVD04N	9080
Easy9 DB 6Way phase selector vertical	8 + 6 x 3	EZ9EPVD06N	9673
Easy9 DB 8Way phase selector vertical	8 + 8 x 3	EZ9EPVD08N	10442

Phase Selector Switch

Description	Reference	Unit MRP [₹]
Easy9 DB 40A selector switch	EZ9EPS40SN	8266
Easy9 DB 63A selector switch	EZ9EPS63SN	9673

SPN DBs

Description	Total Module Cutout Width** (Incomer + Outgoing)"	Single Door (IP30) Reference	Unit MRP [₹]	Double Door Metal (IP43) Reference	Unit MRP [₹]
Easy9 SPN DB 4 way	2 + 2	-	-	EZ9ESND04	2243
Easy9 SPN DB 6 way	2 + 4	-	-	EZ9ESND06	2325
Easy9 SPN DB 8 way	2 + 6	**EZ9ESNS08**	1666	EZ9ESND08	2550
Easy9 SPN DB 10 way	2 + 8	-	-	EZ9ESND10	2767
Easy9 SPN DB 12 way	2 + 10	-	-	EZ9ESND12	3041
Easy9 SPN DB 16 way	2 + 14	-	-	EZ9ESND16	4480

Note:
Please contact nearest Schneider Electric Sales Office or Customer Care Center for Stockable and Non Stockable status of references
*Bold references are MTO reference.

W.E.F. January 15th, 2026

Easy9 Distribution Boards

TPN DBs

Description	Total Module Cutout Width** (Incomer + Outgoing)	Double DoorMetal (IP43) Reference	Unit MRP [₹]
Easy9 TPN DB 4 way - 4 Mod Incomer	4 + 4 x 3	EZ9ETND04E	4513
Easy9 TPN DB 4 way	8 + 4 x 3	EZ9ETND04	5209
Easy9 TPN DB 6 way	8 + 6 x 3	EZ9ETND06	6490
Easy9 TPN DB 8 way	8 + 8 x 3	EZ9ETND08	8193
Easy9 TPN DB 12 way	8 + 12 x 3	EZ9ETND12	12547

VTPN DBs Modular Incomer

Description	Total Module Cutout Width** (Incomer + Outgoing)	Double DoorMetal (IP43) Reference	Unit MRP [₹]
Easy9 VTPN DB 4 Ways Modular i/c	12+12	**EZ9EVM04**	9601
Easy9 VTPN DB 8 Ways Modular i/c	12+24	**EZ9EVM08**	13814
Easy9 VTPN DB 12 Ways Modular i/c	12+36	**EZ9EVM12**	17391

VTPN DBs MCCB Incomer

Description	Total Module Cutout Width** (Incomer + Outgoing)	Double DoorMetal (IP43) Reference	Unit MRP [₹]
Easy9 VTPN DB 4 Ways CVS i-c 100A	100A MCCB+ 12	**EZ9EVN04L**	12025
Easy9 VTPN DB 8 Ways CVS i-c 100A	100A MCCB+ 24	**EZ9EVN08L**	15734
Easy9 VTPN DB 12 Ways CVS i-c 100A	100A MCCB+ 36	**EZ9EVN12L**	19420
Easy9 VTPN DB 4 Ways CVS i/c 160A	160A MCCB+ 12	**EZ9EVN04M**	13232
Easy9 VTPN DB 8 Ways CVS i/c 160A	160A MCCB+ 24	**EZ9EVN08M**	17665
Easy9 VTPN DB 12 Ways CVS i/c 160A	160A MCCB+ 36	**EZ9EVN12M**	22064
Easy9 VTPN DB 8 Ways CVS i/c 250A	250A MCCB+ 24	**EZ9EVN08H**	17846
Easy9 VTPN DB 12 Ways CVS i/c 250A	250A MCCB+ 36	**EZ9EVN12H**	22266

Accessories

Description	Type	Reference	Unit MRP [₹]
Easy9 Door Bracket-Set of 5 SSP152	Door Bracket	EZ9EBRACKET	424
Easy9 Std Door Knob-Set of 5 SSP144 GRY	Door Knob	EZ9EDOORKNOB	2566

Note:
Please contact nearest Schneider Electric Sales Office or Customer Care Center for Stockable and Non Stockable status of references
*Bold references are MTO reference.

W.E.F. January 15th, 2026

Wander Plugs

PKE16M423

PKE16M723

81383

- Conforms to IEC 60309-1 & IEC 60309-2
- PK PratiKa Screw Connect: same orientation of clamp's screws
- External impact strength: IK08
- Glow wire test: 850°C

[In] Rated Current (A)	[Ue] Rated Operational Voltage (V)	Poles Description	Reference	Unit MRP [₹]
PratiKa Screw				
IP44				
16	200...250	2P + E	PKE16M423 ☑	678
		2P + E	**PKX16M423** ●	1383
	380...415	3P + E	PKE16M434 ☑	866
		3P + N + E	PKE16M435 ☑	903
32	200...250	2P + E	PKE32M423 ☑	1066
	380...415	3P + E	PKE32M434	1250
		3P + N + E	PKE32M435 ☑	1221
IP67				
16	200...250	2P + E	PKE16M723 ☑	1481
		2P + E	**PKX16M723** ●	2201
	380...415	3P + E	PKE16M734	1689
		3P + N + E	PKE16M735	1805
32	200...250	2P + E	PKE32M723	2116
	380...415	3P + E	PKE32M734 ☑	2282
		3P + N + E	PKE32M735 ☑	2278
PK (63A & 125A available in IP67 only)				
63	200...250	2P + E	81378	5998
	380...415	3P + E	81382 ☑	5717
		3P + N + E	81383 ☑	5672
125	380...415	3P + E	**81394**	17491
		3P + N + E	81395	17491

Note: * Fast Connection

Small Wall Mounted Sockets

PKF16W423

PKF16W723

PKF32W735

- Conforms to IEC 60309-1 & IEC 60309-2
- External impact strength: IK08
- Glow wire test: 850°C

[In] Rated Current (A)	[Ue] Rated Operational Voltage (V)	Poles Description	Reference	Unit MRP [₹]
IP44				
16	200...250	2P + E	PKF16W423	1198
	380...415	3P + E	PKF16W434	1390
		3P + N + E	PKF16W435	1518
32	200...250	2P + E	PKF32W423	1566
	380...415	3P + E	**PKF32W434**	1879
		3P + N + E	PKF32W435	1985
IP67				
16	200...250	2P + E	**PKF16W723**	1903
	380...415	3P + E	**PKF16W734**	2391
		3P + N + E	**PKF16W735**	2472
32	200...250	2P + E	PKF32W723	2382
	380...415	3P + E	**PKF32W734**	3478
		3P + N + E	**PKF32W735**	4613

Note: For all above Reference MOQ = 1

Please contact Customer Care Center for Stockable and Non stockable status of references.
*Bold references are MTO reference.

W.E.F. January 15th, 2026

Wall Mounted Sockets

81178

81183

- Conforms to IEC 60309-1 & IEC 60309-2
- Rated operational voltage upto 415V
- Rated operational current upto 125A
- External impact strength: IK08
- Glow wire test: 850°C
- Available only in IP67

[In] Rated Current (A)	[Ue] Rated Operational Voltage (V)	Poles Description	Reference	Unit MRP [₹]
63	200...250	2P + E	**81178**	7388
	380...415	3P + E	**81182** ●	8139
		3P + N + E	81183	7714
125	380...415	3P + E	**81194**	26647
		3P + N + E	**81195**	26777

Wander Sockets

PKF16M423

81483

PKF32M735

- PK PratiKa Screw Connect: same orientation of clamp's screws.
- PK PratiKa: 16A & 32A; IP44 & IP67
- External impact strength: IK08
- Glow wire test: 850 °C
- Conforms to IEC 60309-1 & IEC 60309-2

[In] Rated Current (A)	[Ue] Rated Operational Voltage (V)	Poles Description	Reference	Unit MRP [₹]
PratiKa Screw				
IP44				
16	200...250	2P + E	PKF16M423 ☑	948
		2P + E	**PKY16M423**	1044
	380...415	3P + E	PKF16M434	1093
		3P + N + E	PKF16M435	1193
32	200...250	2P + E	PKF32M423 ☑	1303
	380...415	3P + E	**PKF32M434**	1582
		3P + N + E	PKF32M435 ☑	1592
IP67				
16	200...250	2P + E	PKF16M723	1755
		2P + E	**PKY16M723** ●	2135
	380...415	3P + E	**PKF16M734**	2201
		3P + N + E	PKF16M735	2299
32	380...415	2P + E	PKF32M723	2413
		3P + E	**PKF32M734**	2670
		3P + N + E	PKF32M735	2695
PK (63A & 125A available in IP67 only)				
63	200...250	2P + E	81478	6533
	380...415	3P + E	**81482**	6590
		3P + N + E	81483	6633
125	380...415	3P + E	**81494**	20622
		3P + N + E	81495	21026

Also Available on Request:
- Patented FAST connect Plugs & Sockets - innovative cabling system that enables connection without stripping the conductor and with absolutely no screws required
- Extra Low Voltage Plugs & Sockets down to 50V

Please contact nearest Schneider Electric Sales Office or Customer Care for Reference and Prices

Note: For all above Reference MOQ = 1

Please contact Customer Care Center for Stockable and Non stockable status of references.
*Bold references are MTO reference.

W.E.F. January 15th, 2026

Panel Mounted Sockets - Angled

PKF16F423

PKF32F723

81283

- PK PratiKa Screw Connect: same orientation of clamp's screws
- External impact strength: IK08
- Glow wire test: 850°C
- Conforms to IEC 60309-1 & IEC309-2

[In] Rated Current (A)	[Ue] Rated Operational Voltage (V)	Poles Description	Reference	Unit MRP [₹]
PratiKa Screw				
IP44				
16	200...250	2P + E	PKF16F423 ☑	777
		2P + E	**PKY16F423** ●	791
	380...415	3P + E	PKF16F434	1093
		3P + N + E	PKF16F435 ☑	1166
32	200...250	2P + E	PKF32F423 ☑	1290
	380...415	3P + E	PKF32F434	1512
		3P + N + E	PKF32F435	1491
IP67				
16	200...250	2P + E	PKF16F723 ☑	1368
	380...415	2P + E	**PKY16F723** ●	1673
		3P + E	PKF16F734	1573
		3P + N + E	PKF16F735 ☑	1592
32	380...415	2P + E	PKF32F723	1798
		3P + E	PKF32F734	2101
		3P + N + E	PKF32F735	2115
PK (63A & 125A available in IP67 only)				
63	200...250	2P + E	81278	5898
	380...415	3P + E	81282 ☑	5908
		3P + N + E	81283 ☑	5967
125	380...415	3P + E	**81294**	19899
		3P + N + E	81295	19805

Panel Mounted Sockets - Straight

PKF16G423

PKF16G723

81683

- PK PratiKa Screw Connect: same orientation of clamp's screws
- External impact strength: IK08
- Glow wire test: 850°C
- Conforms to IEC 60309-1 & IEC309-2

[In] Rated Current (A)	[Ue] Rated Operational Voltage (V)	Poles Description	Reference	Unit MRP [₹]
PratiKa Screw				
IP44				
16	200...250	2P + E	PKF16G423	831
	380...415	2P + E	**PKY16G423**	1231
		3P + E	**PKF16G434**	1448
		3P + N + E	**PKF16G435**	1250
32	200...250	2P + E	PKF32G423	1318
	380...415	3P + E	**PKF32G434**	1518
		3P + N + E	PKF32G435	1645
IP67				
16	200...250	2P + E	PKF16G723	1390
		2P + E	**PKY16G723** ●	1566
	380...415	3P + E	**PKF16G734**	1912
		3P + N + E	**PKF16G735**	1592
32	200...250	2P + E	**PKF32G723**	1773
	380...415	3P + E	**PKF32G734**	1994
		3P + N + E	**PKF32G735**	2069
PK (63A & 125A available in IP67 only)				
63	380...415	3P + E	**81682**	5966
		3P + N + E	81683	5966
125		3P + N + E	**81695**	19995

*Fast Connection
Note: For all above Reference MOQ = 1
Please contact Customer Care Center for Stockable and Non stockable status of references.
*Bold references are MTO reference.

W.E.F. January 15th, 2026

Sockets with Interlock Switches - for guaranteed safety of operation

- Allows closure of main switch only when the plug is fully inserted in socket - when complete mechanical & electrical connection has occurred
- Plug removal is possible only when the switch is in “off” position

Wall Mounted Sockets with Interlock Switch Unika (w/o protection)

83047

83081

- Switch designed for use in AC 22A class applications
- Conforms to IEC 60309-1 & IEC 60309-2
- Rated operational voltage upto 415V
- Rated operational current upto 32A
- External impact strength: IK08
- Available in IP44 / IP65 versions
- Glow wire test: 750°C

[In] Rated Current (A)	[Ue] Rated Operational Voltage (V)	Poles Description	Reference	Unit MRP [₹]
IP44				
16	200...250	2P + E	83031	9970
	380...415	3P + N + E	**83036**	14072
32	200...250	2P + E	83042 ☑	12820
	380...415	3P + E	**83046**	20950
		3P + N + E	83047	15107
IP65				
16	200...250	2P + E	83081	10315
	380...415	3P + E	**83085**	14206
		3P + N + E	**83086**	14494
32	200...250	2P + E	**83092**	13519
	380...415	3P + N + E	83097	16232

Socket with Interlock Switch & DIN Rail Isoblock (4.5 modules)

82754

83796

- Switch designed for use in AC- 22A class applications
- Conforms to IEC 60309-1 & IEC 60309-2
- Provision to DIN mount 4.5 module device
- External impact strength: IK10
- Available in IP65 version
- Glow wire test: 850°C

[In] Rated Current (A)	[Ue] Rated Operational Voltage (V)	Poles Description	Reference	Unit MRP [₹]
16	200...250	2P + E	82754 ☑	12242
	380...415	3P + N + E	**82759**	18900
32	200...250	2P + E	83791 ☑	14494
	380...415	3P + N + E	83796	17267

Socket with Interlock Switch & DIN Rail Isoblock (6 modules)

82766

- Switch designed for use in AC- 22A class applications
- Conforms to IEC 60309-1 & IEC 60309-2
- Provision to DIN mount 6 module device
- External impact strength: IK10
- Available in IP65 version
- Glow wire test: 850°C

[In] Rated Current (A)	[Ue] Rated Operational Voltage (V)	Poles Description	Reference	Unit MRP [₹]
32	200...250	2P + E	**82766**	19304
63	380...415	3P + E	**82782**	26011
		3P + N + E	82783	25845

Please contact Customer Care Center for Stockable and Non stockable status of references.
*Bold references are MTO reference.

W.E.F. January 15th, 2026

Metal Clad Plugs & Sockets

ELECTRA Metal Clad Plugs & Sockets are specially designed incorporating the latest safety, quality and user friendly features.

Construction

- The casting is made from non-corroding die-cast aluminum alloy combining exceptional compactness with high strength
- The design/construction eliminates the possibility of mismatch in fitting of plugs in corresponding sockets
- The floating contacts in the sockets are self aligning and facilitates smooth plugging in without undue pressure (These can be easily removed for wiring)
- A provision for pilot pin facilitates mechanical interlocking in case of 63A ratings

Human Safety

Specially designed shroud to avoid accidental finger contact with plug-pins while inserting/removing the plug
Similarly, the contact tubes in sockets are deeply recessed to avoid human contact

- The earthing pins ensure that earth connection is made first and broken last, being longer than conducting pins
- The visible earth terminals facilitate easy checking of earth connection
- The cable grip to the plug is made very strong by providing a compression gland and by protecting it at the point of entry by a strong rubber guard

Applications

Industrial, Commercial & Domestic portable equipments like Hand/Power Tools, Industrial Ovens, Welding Sets, Mobile Generators, Furnaces, Ships, Office Machines, Refrigerators, Coolers, Air-Conditioners, Overhead Cranes, Chilling Cabinets, Tile Polishers and Sewing Machines

Plug

Rating (A)	Poles Description	Voltage (V)	MOQ	Reference	Unit MRP [₹]
10	2P	250	30	AP10 ☑	316
20	2P	250	30	AP20 ☑	333
20	3P	440	30	BP20 ☑	443
30	3P	440	20	BP30 ☑	806
63	3P+N+E	440	4	CP63 ☑	3644

Socket

Rating (A)	Poles Description	Voltage (V)	MOQ	Reference	Unit MRP [₹]
10	2P	250	30	AS10 ☑	333
20	2P	250	30	AS20 ☑	355
20	3P	440	30	BS20 ☑	497
30	3P	440	20	BS30 ☑	853
63	3P+N+E	440	4	CS63 ☑	4082

Please contact Customer Care Center for Stockable and Non stockable status of references.
*Bold references are MTO reference.

W.E.F. January 15th, 2026

Complete range of switches & sockets suitable for both indoor & outdoor applications like Kitchens, Swimming Pools, Landscape Gardens, Exterior Walls and Other Environmentally Challenged Locations.

56SW116LE-GY

56SW216LE-GY

56SW332LE-GY

Description	IP Rating	Reference	Unit MRP [₹]
Surface Switches			
Single Pole Switches Less Enclosure			
1 Pole 250V 10A	IP66	**56SW110LE-GY**	4396
1 Pole 250V 16A	IP66	56SW116LE-GY	4079
1 Pole 250V 20A	IP66	56SW120LE-GY	6176
1 Pole 250V 32A	IP66	56SW132LE-GY	7365
Double Pole Switches Less Enclosure			
2 Pole 500V 16A	IP66	**56SW216LE-GY**	7115
2 Pole 500V 20A	IP66	**56SW220LE-GY**	7115
2 Pole 500V 32A	IP66	**56SW232LE-GY**	9442
2 Pole 500V 50A	IP66	**56SW250LE-GY**	11027
Triple Pole Switches Less Enclosure			
3 Pole 500V 10A	IP66	**56SW310LE-GY**	6581
3 Pole 500V 16A	IP66	56SW316LE-GY	6865
3 Pole 500V 20A	IP66	56SW320LE-GY	7227
3 Pole 500V 32A	IP66	56SW332LE-GY	8347
3 Pole 500V 50A	IP66	56SW350LE-GY	9722
3 Pole 500V 63A	IP66	56SW363LE-GY	11285
Four Pole Switches Less Enclosure			
4 Pole 500V 20A	IP66	**56SW420LE-GY**	9542

66CV563-RG

66P563-EO

Description	IP Rating	Reference	Unit MRP [₹]
IP66 Industrial Combination Switch Sockets with Enclosure			
Single Pole Switches Less Enclosure			
500V, 63A with 4 pole switch and 63A 5 Pin Socket	IP66	**66CV563-RG**	127903
Plug Top 5 Pin 500V 63A	IP66	**66P563-EO**	38390

Please contact Customer Care Center for Stockable and Non stockable status of references.
*Bold references are MTO reference.

W.E.F. January 15th, 2026

Plugs and Sockets - IP56 / IP66

56SO316RP-LE-GY-EX

56SO432LE-GY

56SO532LE-GY

Description	IP Rating	Reference	Unit MRP [₹]
Surface Socket Outlets			
3 Pin Sockets Less Enclosure			
3 Pin 250V 16A Indian Standard	IP66	56SO316RP-LE-GY-EX	4106
3 Pin 250V 20A Round Pin	IP66	56SO320LE-GY	5960
3 Pin 250V 32A Round Pin	IP66	56SO332LE-GY	6639
4 Pin Sockets Less Enclosure			
4 Pin 500V 20A Round Pin	IP66	**56SO420LE-GY**	8903
4 Pin 500V 32A Round Pin	IP66	**56SO432LE-GY**	10645
4 Pin 500V 50A Round Pin	IP66	**56SO450LE-GY**	16379
5 Pin Sockets Less Enclosure			
5 Pin 500V 10A Round Pin	IP66	**56SO510LE-GY**	9620
5 Pin 500V 20A Round Pin	IP66	56SO520LE-GY	9529
5 Pin 500V 32A Round Pin	IP66	56SO532LE-GY	11316
5 Pin 500V 40A Round Pin	IP66	56SO540LE-GY	16484
5 Pin 500V 50A Round Pin	IP66	56SO550LE-GY	16923

*Alternate reference 56SO440-GY (coming soon)

56PA420-EO

56PA532-EO

56CVI520-GY

Description	IP Rating	Reference	Unit MRP [₹]
Plugs			
3 Pin Angle Plugs			
3 pin 250V 16A Round Pin	IP66	56PA316RP-GY-EX	3088
3 Pin 250V 20A Round Pin	IP66	56PA320-EO	6176
3 Pin 250V 32A Round Pin	IP66	56PA332-EO	7135
4 Pin Angle Plugs			
4 Pin 500V 20A Round Pin	IP66	**56PA420-EO**	7599
4 Pin 500V 32A Round Pin	IP66	**56PA432-EO**	7910
4 Pin 500V 40A Round Pin	IP66	**56PA440-EO**	13156
4 Pin 500V 50A Round Pin	IP66	56PA450-EO	9386
5 Pin Angle Plugs			
5 Pin 500V 10A Round Pin	IP66	**56PA510-EO**	7469
5 Pin 500V 20A Round Pin	IP66	56PA520-EO	7469
5 Pin 500V 32A Round Pin	IP66	56PA532-EO	8547
5 Pin 500V 40A Round Pin	IP66	56PA540-EO	9126
5 Pin 500V 50A Round Pin	IP66	56PA550-EO	9343
Combination Switch Socket Outlet			
IP66 Interlocked Switch Socket with Enclosure			
4 Pin 500V 20A Round Pin	IP66	**56CVI420-GY**	32648
5 Pin 500V 20A Round Pin	IP66	**56CVI520-GY**	29536
5 Pin 500V 32A Round Pin	IP66	**56CVI532-GY**	29806

Please contact Customer Care Center for Stockable and Non stockable status of references.
*Bold references are MTO reference.

W.E.F. January 15th, 2026

56 Series

56DB2-GY

56CB4N-GY

Description	IP Rating	Reference	Unit MRP [₹]
Adaptable Enclosures with Gear Tray			
2 Gangpoints, 198X101X140mm	IP66	**56DB2-GY**	8149
Junction Boxes			
3 Gangpoints, 300X101X90mm	IP66	**56JB3-GY**	12214
4 Gangpoints, 204X198X90mm	IP66	**56JB4-GY**	11466

Description	Module Width	Reference	Unit MRP [₹]
Switchgear Cover Assembly			
For 1,2,3 Pole MCB with 4 Pole RCD (max. 4M Width)	4	56CB4N-GY	6769

56FA2-GY

56E2-GY

56E1-GY

Description	No. of Gangs	Reference	Unit MRP [₹]
Flush Surrounds			
Flush Surround	2	**56FA2-GY**	3335
Flush Surround	3	**56FA3-GY**	5251
Mounting Enclosures (Back Boxes)			
101X101X63mm	1	56E1-GY	1437
198X101X63mm	2	56E2-GY	3686

Please contact Customer Care Center for Stockable and Non stockable status of references.
*Bold references are MTO reference.

W.E.F. January 15th, 2026